KAGA FEI AMERICA, Inc.

11Watt, Single Output , Medical AC/DC Converter

FEATURES:

- Universal Input 80~264VAC
- Medical safety design refers to (2 X MOPP)
- Suitable for BF application with appropriate system consideration
- Safety Standard IEC/EN62368-1,IEC/EN60601-1
- Extremely low leakage current
- EMI class B For class Ⅱ configuration
- Protection: Short Circuit /Overload/Over Voltage/Over Temperature
- No minimum load required
- 2 Years Warranty
- ROHS Compliant

GA10M - S 24
A B C

A:Series
B:Single Output
C:Output Voltage

Applications:

- Portable medical device
- Mobile clinical workstaion
- Modical computer monitor
- Medical examination instrument

Specifications typical at TA=25°C, nominal input voltage and rated output current unless otherwise specified

Part Number	Output Wattage	Output Voltage	Output Current		Ripple & Noise(note)	Efficiency
	(W)	(V)	(mA)(min)	(mA)(max)	(mV) max	%(TYP)
GA10M-S24	11	Vo=+24	0	460	200	83

Input Specifications

Parameters	Conditions		Min	Typ	Max	Units
Rated Input Voltage	Vo,Io nom			100~240		Vac
Voltage Range	Vo,Io nom	AC in	80		264	Vac
		DC in	105		370	Vdc
Line frequency	Vi nom,Ionom		47	50/60	63	Hz
Inrush Current	Io nom	Vi:115VAC			25	A
		Vi:230VAC			45	A
Input Current(Full load)	0.3A (115Vac) 0.2A (230Vac)					
Input Fuse	VDE/UL/CCC FUSE 2.5A/250V (Slow blow).					

Output Specifications

Parameters	Conditions	Min	Typ	Max	Units
Output Voltage Accuracy	Vi nom,Io nom			±2	%
Minimum Load	Vi nom	0			%
Line Regulation	Io nom,Vi min…Vi max		±0.3		%
Load Regulation	Vi nom, Io min…Io nom		±0.5		%
Protection	Overload	Above 110% rated output power			
		Protection type: Recovers automatically after fault condition is removed			
	Short circuit	Recovers automatically after fault condition is removed			
	Over Voltage	110%-150% rated output Voltage			
		Protection type:Zener diode clamp			
	Over Temperature	**Protection type**:Shut down o/p voltage, recovers automatically after temperature goes down			

Notes: Ripple & noise is measured by using 20 MHz bandwidth, measured with a 47uf paralleled with a high-frequency 0.47uf capacitor arcoss each output by full load.

CONTACT US
KAGA FEI America, Inc.
2349 Bering Drive
San Jose, CA 95131
Phone: (408) 570-0955
Fax: (408) 570-0186
Toll Free: (888) 2 - VOLGEN
www.volgen.com
Email: information@volgen.com

KAGA FEI AMERICA, Inc.

11Watt, Single Output , Medical AC/DC Converter

General Specifications

Parameters	Conditions	Min	Typ	Max	Units
Isolation Voltage	Input / Output	4KVac/ 5mA/60Secs			
Isolation Resistance	Input / Output,@500 Vdc	100			MΩ
Operating Temperature	Operating at Vi nom,Io nom	-25		+85	℃
Storage Temperature	Non Operational	-40		+100	℃
Relative Humidity	Vi nom,Io nom			95	% RH
Dimension	L50.80x W25.40 x H17.02mm				
Cooling	Free air convection				

Circuit Schematic

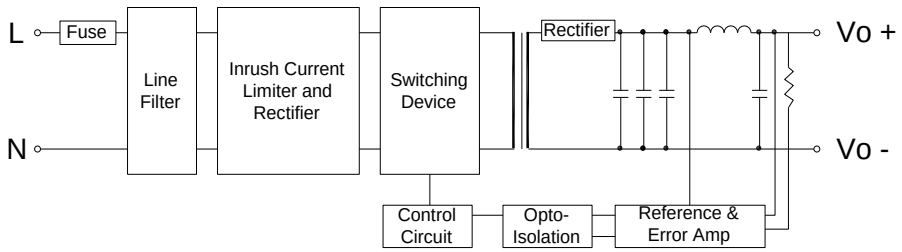

Temperature Derating Graph

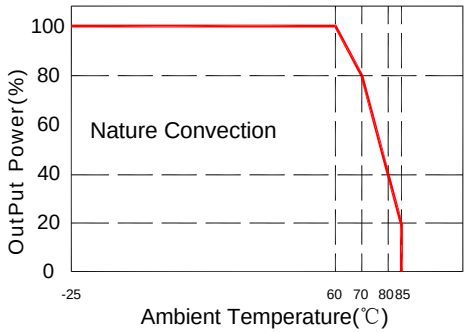

Output Derating VS Input Voltage

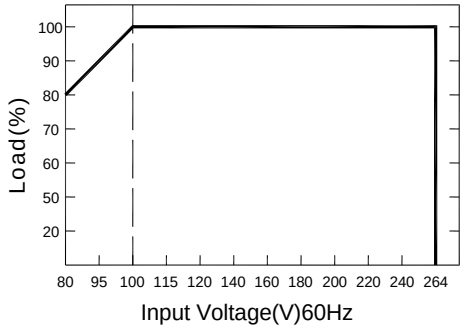

Markings and dimensions

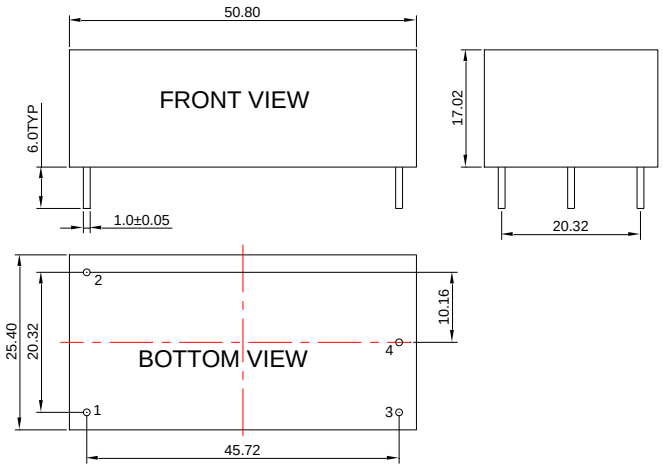

Unit：mm Unless otherwise specified, all tolerances are ±0.50

PIN Connection

PIN	1	2	3	4
GA10M	ACN	ACL	-Vo	+Vo

CONTACT US

KAGA FEI America, Inc.
2349 Bering Drive
San Jose, CA 95131

Phone: (408) 570-0955
Fax: (408) 570-0186
Toll Free: (888) 2 - VOLGEN

www.volgen.com
Email: information@volgen.com

11Watt, Single Output , Medical AC/DC Converter

1. Weight:40grams/pcs
2. outer carton unit：180pcs/box
3. Weight: 9.0kg per carton

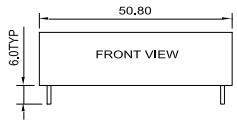

Mechanicals

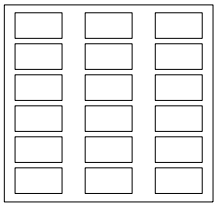

18Pcs/BOX

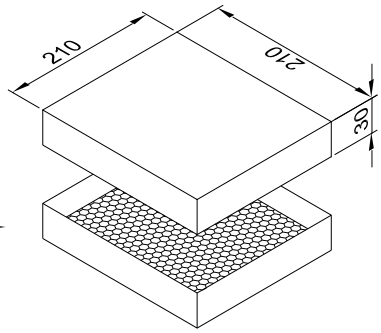

Box Size:210x210x30

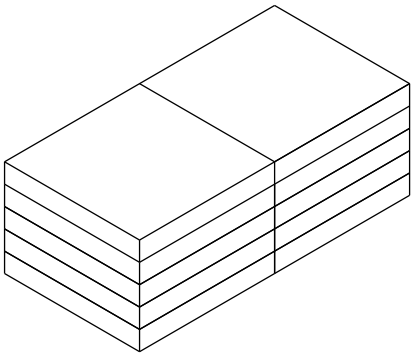

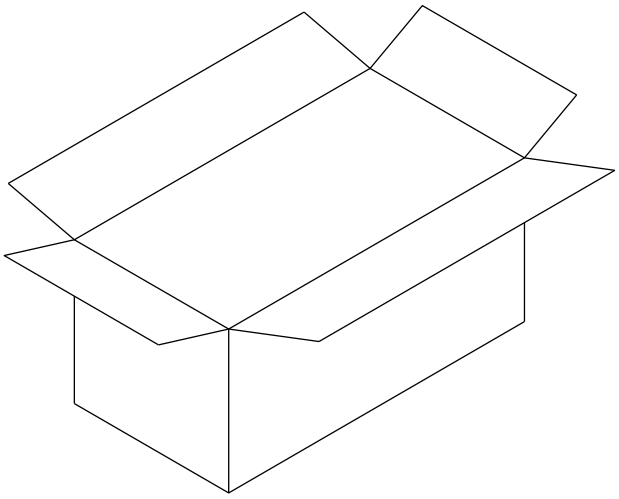

Outer carton： 460x240x220mm

UNIT:mm

CONTACT US
KAGA FEI America, Inc.
2349 Bering Drive
San Jose, CA 95131
Phone: (408) 570-0955
Fax: (408) 570-0186
Toll Free: (888) 2 - VOLGEN
www.volgen.com
Email: information@volgen.com